click-canopies.co.uk

residential & industrial external door canopies
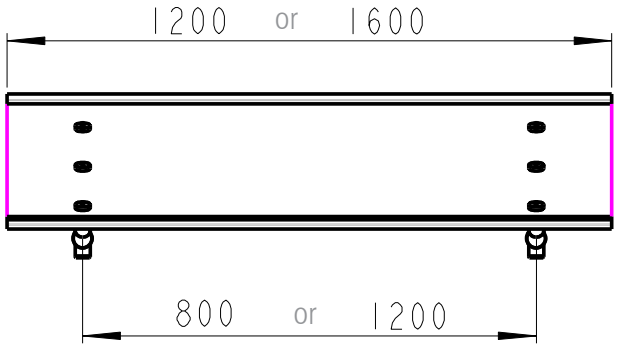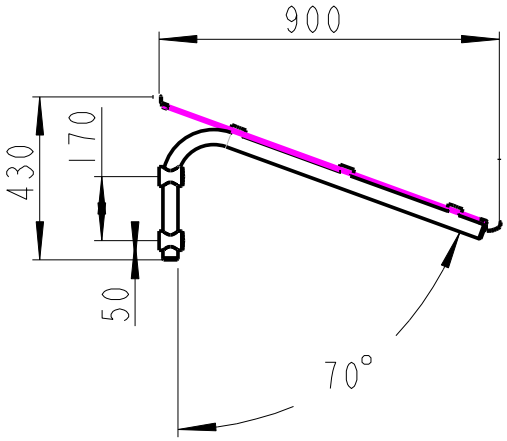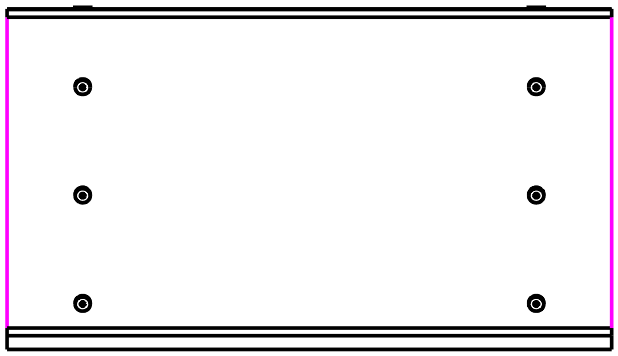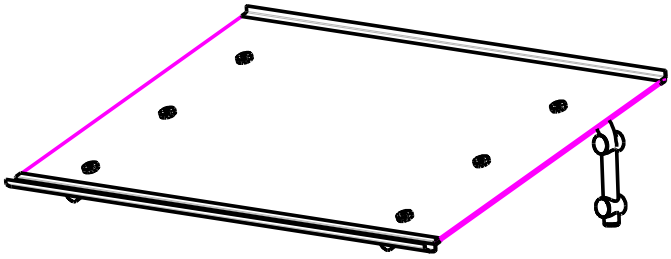
Shield Acrylic Canopy